THERMASGARD® RGTF 2

Screw-in temperature sensors / smoke gas temperature sensors with neck tube and passive output

S+S REGELTECHNIK

Screw-in resistance thermometer / smoke gas temperature sensor with neck tube **THERM**ASGARD® **RGTF 2** with passive output, with connecting head made from aluminium (optionally with **cable gland** or **M12 connector** according to DIN EN 61076-2-101) and straight protective tube.

The duct sensor is used to detect relatively high temperatures in liquid or gaseous media, eg, for exhaust air and smoke gas temperature measurement..

RGTF 2
standard



RGTF 2
Measuring insert with ceramic tubelet

TECHNICAL DATA

Measuring range:	–35...+600 °C (extended range limits from –100...+750 °C optional)
Sensor / output:	Pt100 / Pt1000 (according to DIN EN 60 751, class B) (**Perfect Sensor Protection**)
Connection type:	2-wire connection (Pt1000) 4-wire connection (Pt100; optional Pt1000)
Testing current:	< 0.6 mA (Pt1000) < 1.0 mA (Pt100)
Insulating resistance:	≥ 100 MΩ, at +20 °C (500 V DC)
Electrical connection:	0.14 - 2.5 mm² via terminal screws on ceramic base
Cable connection:	**RGTF 2** (Standard) adjusting screw made of metal (M 20 x 1.5); **RGTF 2-KV** (optional) **cable gland,** brass, nickel-plated (M 20 x 1.5 ; with strain relief, exchangeable, inner diameter 6 - 12 mm) **RGTF 2-Q** (optional) M12 connector according to DIN EN 61076-2-101 (male, 5-pin, A-code)
Dimensions:	see dimensional drawing
Connecting head:	form B, material aluminium, colour white aluminium (similar to RAL 9006), ambient temperature –20...+100 °C
Protective tube:	stainless steel **V4A** (1.4571), G ½" straight pipe thread, wrench size 27 mm, p_{max} = 40 bar, Ø = 8 mm length of neck tube (HL) = 80 mm inserted length (EL) = 100 - 500 mm (see table)
Process connection:	screwed socket with G ½" straight pipe thread
Humidity:	< 95 % RH, non-precipitating air
Protection class:	III (according to EN 60 730)
Protection type:	**IP 54** (according to EN 60 529) **RGTF 2** **IP 65** (according to EN 60 529) **RGTF 2-KV** / **RGTF 2-Q**

Screw-in temperature sensors / smoke gas temperature sensors with neck tube and passive output

Dimensional drawing [mm]

RGTF 2

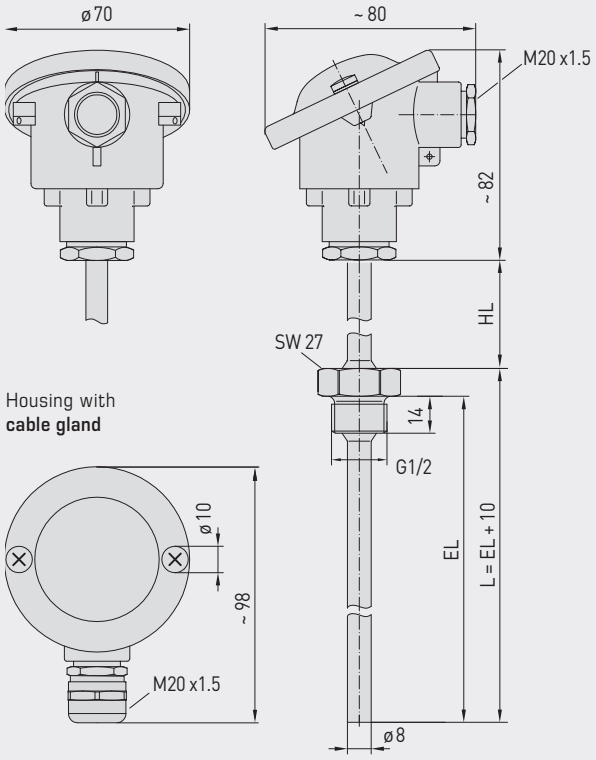

Housing with **cable gland**

Housing with **M12 connector**

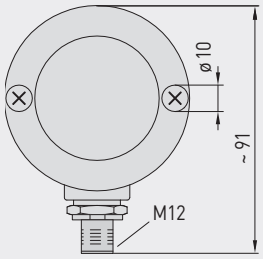



M12 connector (male)

High-performance encapsulation against vibration, mechanical stress and humidity

PS-PROTECTION
PERFECT SENSOR PROTECTION

RGTF 2
standard
(IP 54)



RGTF 2 - KV
with cable gland
(IP 65)



RGTF 2 - Q
with M12 connector
(IP 65)





S+S REGELTECHNIK

Screw-in temperature sensors / smoke gas temperature sensors with neck tube and passive output

2-wire connection
(Pt1000)



4-wire connection
(Pt100 / Pt1000 optional)



1x two-wire connection
(Pt1000)

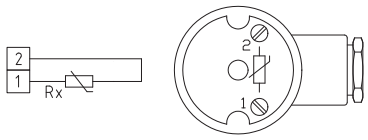

1x four-wire connection
(Pt100 / Pt1000) optional)

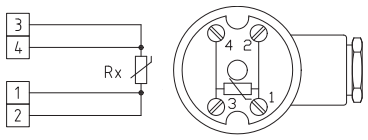

1x two-wire connection
pin assignment (M12)

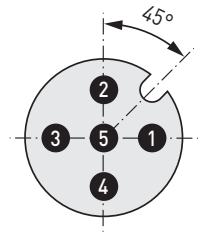

1 2 Rx
3 frei / free
4 frei / free
5 frei / free

1x four-wire connection
pin assignment (M12)

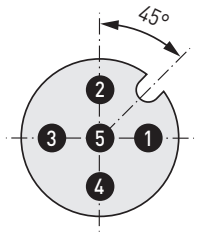

1 2 Rx 3 4
5 frei / free



RGTF 2
standard
(IP 54)



RGTF 2 - KV
with cable gland
(IP 65)



RGTF 2 - Q
with M12 connector
(IP 65)

THERMASGARD® RGTF 2	Screw-in temperature sensors / smoke gas temperature sensors with neck tube (standard)		
Type / WG01	**Sensor / Output**	**Installation length (EL)**	**Item No.**
RGTF2 Pt100 xx	**Pt100** (according to DIN EN 60751, class B)		**IP54**, 4-wire
RGTF2 Pt100 100/80mm	Pt100	**100 mm**	1101-2090-1023-000
RGTF2 Pt100 150/80mm	Pt100	**150 mm**	1101-2090-1033-000
RGTF2 Pt100 200/80mm	Pt100	**200 mm**	1101-2090-1043-000
RGTF2 Pt100 250/80mm	Pt100	**250 mm**	1101-2090-1053-000
RGTF2 Pt100 300/80mm	Pt100	**300 mm**	1101-2090-1063-000
RGTF2 Pt100 500/80mm	Pt100	**500 mm**	1101-2090-1103-000
RGTF2 Pt1000 xx	**Pt1000** (according to DIN EN 60751, class B)		**IP54**, 2-wire
RGTF2 Pt1000 100/80	Pt1000	**100 mm**	1101-2090-5021-000
RGTF2 Pt1000 150/80	Pt1000	**150 mm**	1101-2090-5031-000
RGTF2 Pt1000 200/80	Pt1000	**200 mm**	1101-2090-5041-000
RGTF2 Pt1000 250/80	Pt1000	**250 mm**	1101-2090-5051-000
RGTF2 Pt1000 300/80	Pt1000	**300 mm**	1101-2090-5061-000
RGTF2 Pt1000 500/80	Pt1000	**500 mm**	1101-2090-5101-000
Housing variant:	**with pressure screw** (**IP54**)		
Extra charge:	other measuring ranges optional		on request

THERMASGARD® RGTF 2 - KV	Screw-in temperature sensors / smoke gas temperature sensors with neck tube (with M12 connector)		
Type / WG01	**Sensor / Output**	**Installation length (EL)**	**Item No.**
RGTF2 Pt100 xx KV	**Pt100** (according to DIN EN 60751, class B)		**IP65**, 4-wire
RGTF2 Pt100 100/80mm **KV**	Pt100	**100 mm**	1101-20D0-1023-000
RGTF2 Pt100 150/80mm **KV**	Pt100	**150 mm**	1101-20D0-1033-000
RGTF2 Pt100 200/80mm **KV**	Pt100	**200 mm**	1101-20D0-1043-000
RGTF2 Pt100 250/80mm **KV**	Pt100	**250 mm**	1101-20D0-1053-000
RGTF2 Pt100 300/80mm **KV**	Pt100	**300 mm**	1101-20D0-1063-000
RGTF2 Pt100 500/80mm **KV**	Pt100	**500 mm**	1101-20D0-1103-000
RGTF2 Pt1000 xx KV	**Pt1000** (according to DIN EN 60751, class B)		**IP65**, 2-wire
RGTF2 Pt1000 100/80mm **KV**	Pt1000	**100 mm**	1101-20D0-5021-000
RGTF2 Pt1000 150/80mm **KV**	Pt1000	**150 mm**	1101-20D0-5031-000
RGTF2 Pt1000 200/80mm **KV**	Pt1000	**200 mm**	1101-20D0-5041-000
RGTF2 Pt1000 250/80mm **KV**	Pt1000	**250 mm**	1101-20D0-5051-000
RGTF2 Pt1000 300/80mm **KV**	Pt1000	**300 mm**	1101-20D0-5061-000
RGTF2 Pt1000 500/80mm **KV**	Pt1000	**500 mm**	1101-20D0-5101-000
Housing variant "Q":	**with cable gland** (**IP65**)		
Extra charge:	other measuring ranges optional		on request

THERMASGARD® RGTF 2 - Q	Screw-in temperature sensors / smoke gas temperature sensors with neck tube (with cable gland)			
Type / WG03	**Sensor / Output**	**Installation length (EL)**	**Q** ●	**Item No.**
RGTF2 Pt100 xx Q	**Pt100** (according to DIN EN 60751, class B)			**IP65**, 4-wire
RGTF2 Pt100 100/80mm **Q**	Pt100	**100 mm**	●	2Z01-4141-0100-011
RGTF2 Pt100 150/80mm **Q**	Pt100	**150 mm**	●	2Z01-4141-0100-021
RGTF2 Pt100 200/80mm **Q**	Pt100	**200 mm**	●	2Z01-4141-0100-031
RGTF2 Pt100 250/80mm **Q**	Pt100	**250 mm**	●	2Z01-4141-0100-041
RGTF2 Pt100 300/80mm **Q**	Pt100	**300 mm**	●	2Z01-4141-0100-051
RGTF2 Pt100 500/80mm **Q**	Pt100	**500 mm**	●	2Z01-4141-0100-061
RGTF2 Pt1000 xx Q	**Pt1000** (according to DIN EN 60751, class B)			**IP65**, 2-wire
RGTF2 Pt1000 100/80mm **Q**	Pt1000	**100 mm**	●	2Z05-4141-0100-011
RGTF2 Pt1000 150/80mm **Q**	Pt1000	**150 mm**	●	2Z05-4141-0100-021
RGTF2 Pt1000 200/80mm **Q**	Pt1000	**200 mm**	●	2Z05-4141-0100-031
RGTF2 Pt1000 250/80mm **Q**	Pt1000	**250 mm**	●	2Z05-4141-0100-041
RGTF2 Pt1000 300/80mm **Q**	Pt1000	**300 mm**	●	2Z05-4141-0100-051
RGTF2 Pt1000 500/80mm **Q**	Pt1000	**500 mm**	●	2Z05-4141-0100-061
Housing variant "KV":	**with M12 connector** (male, **5-pin**, A-code) (**IP65**)			
Extra charge:	other measuring ranges optional			on request