THERMASGARD® RGTF 1

Duct temperature sensors / smoke gas temperature sensors, including mounting flange, with passive output

S+S REGELTECHNIK

Resistance thermometer / smoke gas temperature sensor **THERM**ASGARD® **RGTF 1** with passive output, with connecting head made from aluminium (optionally with **cable gland** or **M12 connector** according to DIN EN 61076-2-101) and straight protective tube, incl. mounting flange.

The duct sensor is used to detect relatively high temperatures in gaseous media, eg, for exhaust air and smoke gas temperature measurement.

TECHNICAL DATA

Measuring range:	–35...+600 °C (extended range limits from –100...+750 °C optional)
Sensor / output:	Pt100 / Pt1000 (according to DIN EN 60 751, class B) (**Perfect Sensor Protection**)
Connection type:	2-wire connection (Pt1000) 4-wire connection (Pt100; optional Pt1000)
Testing current:	< 0.6 mA (Pt1000) < 1.0 mA (Pt100)
Insulating resistance:	≥ 100 MΩ, at +20 °C (500 V DC)
Electrical connection:	0.14 - 2.5 mm² via terminal screws on ceramic base
Cable connection:	**RGTF 1** (standard) adjusting screw made of metal (M 20 x 1.5); **RGTF 1-KV** (optional) cable gland, brass, nickel-plated (M 20 x 1.5 ; with strain relief, exchangeable, inner diameter 6 - 12 mm) **RGTF 1-Q** (optional) M12 connector according to DIN EN 61076-2-101 (male, 5-pin, A-code)
Dimensions:	see dimensional drawing
Connecting head:	form B, material aluminium, colour white aluminium (similar to RAL 9006), ambient temperature –20...+100 °C
Protective tube:	stainless steel **V4A** (1.4571), Ø = 8 mm inserted length (EL) = 200 - 500 mm (see table)
Process connection:	by mounting flange, stainless steel **V2A** (1.4305) (included in the scope of delivery)
Humidity:	< 95 % RH, non-precipitating air
Protection class:	III (according to EN 60 730)
Protection type:	**IP 54** (according to EN 60 529) **RGTF 1** **IP 65** (according to EN 60 529) **RGTF1-KV** / **RGTF1-Q**

RGTF 1
standard



RGTF 1
Measuring insert with ceramic tubelet

Duct temperature sensors / smoke gas temperature sensors, including mounting flange, with passive output

Dimensional drawing
[mm]

RGTF 1

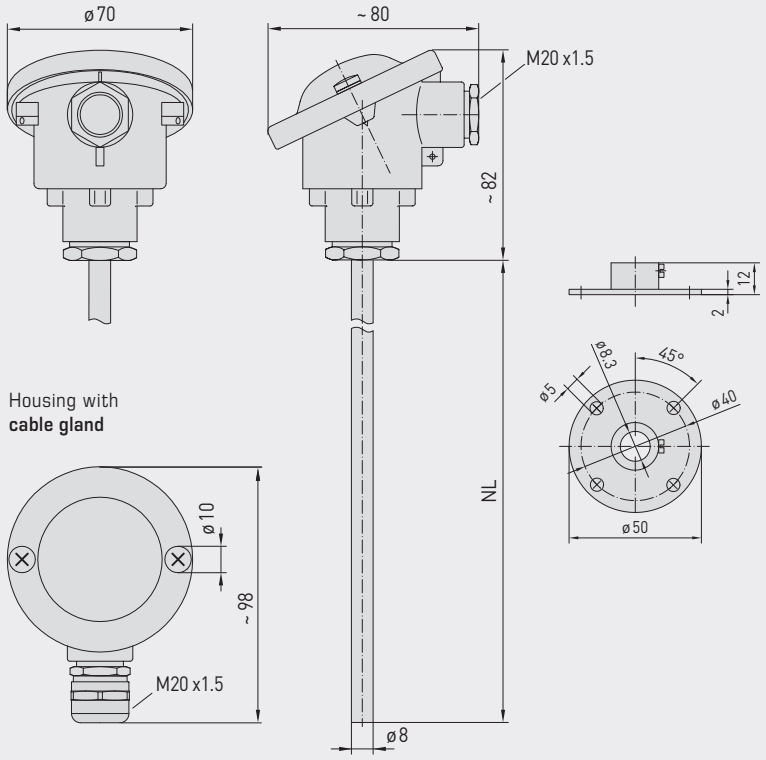

Housing with
cable gland

Housing with
M12 connector

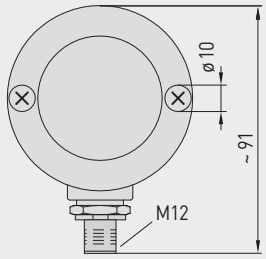



M12 connector
(male)

RGTF 1
standard
(IP 54)



RGTF 1 - KV
with cable gland
(IP 65)



RGTF 1 - Q
with M12 connector
(IP 65)





High-performance encapsulation against vibration, mechanical stress and humidity

PS-PROTECTION
PERFECT SENSOR PROTECTION

Duct temperature sensors / smoke gas temperature sensors, including mounting flange, with passive output

S+S REGELTECHNIK

2-wire connection
(Pt1000)



4-wire connection
(Pt100 / Pt1000 optional)



1x two-wire connection
(Pt1000)

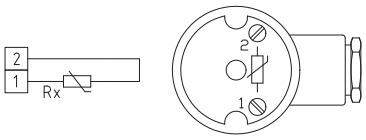

1x four-wire connection
(Pt100 / Pt1000) optional)

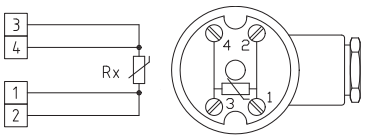

1x two-wire connection
pin assignment (M12)

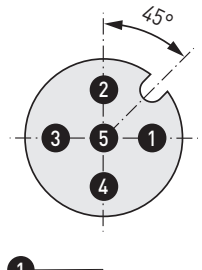

1 2 Rx
3 frei / free
4 frei / free
5 frei / free

1x four-wire connection
pin assignment (M12)

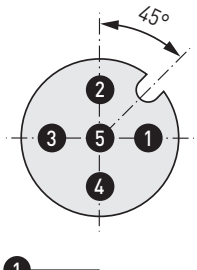

1 2 3 4 Rx
5 frei / free



RGTF 1
standard
(IP 54)



RGTF 1 - KV
with cable gland
(IP 65)



RGTF 1 - Q
with M12 connector
(IP 65)

THERMASGARD® RGTF 1	Duct temperature sensors / smoke gas temperature sensors, including mounting flange (Standard)		
Type / WG01	**Sensor / Output**	**Installation length (EL)**	**Item No.**
RGTF1 Pt100 xx	**Pt100** (according to DIN EN 60751, class B)		**IP54**, 4-wire
RGTF1 Pt100 200mm	Pt100	**200 mm**	1101-3040-1043-000
RGTF1 Pt100 250mm	Pt100	**250 mm**	1101-3040-1053-000
RGTF1 Pt100 300mm	Pt100	**300 mm**	1101-3040-1063-000
RGTF1 Pt100 500mm	Pt100	**500 mm**	1101-3040-1103-000
RGTF1 Pt1000 xx	**Pt1000** (according to DIN EN 60751, class B)		**IP54**, 2-wire
RGTF1 Pt1000 200mm	Pt1000	**200 mm**	1101-3040-5041-000
RGTF1 Pt1000 250mm	Pt1000	**250 mm**	1101-3040-5051-000
RGTF1 Pt1000 300mm	Pt1000	**300 mm**	1101-3040-5061-000
RGTF1 Pt1000 500mm	Pt1000	**500 mm**	1101-3040-5101-000
Housing variant:	**with pressure screw** (**IP54**)		
Extra charge:	other measuring ranges optional		on request

THERMASGARD® RGTF 1 - KV	Duct temperature sensors / smoke gas temperature sensors, including mounting flange (with cable gland)		
Type / WG01	**Sensor / Output**	**Installation length (EL)**	**Item No.**
RGTF1 Pt100 xx KV	**Pt100** (according to DIN EN 60751, class B)		**IP65**, 4-wire
RGTF1 Pt100 200mm **KV**	Pt100	**200 mm**	1101-30D0-1043-000
RGTF1 Pt100 250mm **KV**	Pt100	**250 mm**	1101-30D0-1053-000
RGTF1 Pt100 300mm **KV**	Pt100	**300 mm**	1101-30D0-1063-000
RGTF1 Pt100 500mm **KV**	Pt100	**500 mm**	1101-30D0-1103-000
RGTF1 Pt1000 xx KV	**Pt1000** (according to DIN EN 60751, class B)		**IP65**, 2-wire
RGTF1 Pt1000 200mm **KV**	Pt1000	**200 mm**	1101-30D0-5041-000
RGTF1 Pt1000 250mm **KV**	Pt1000	**250 mm**	1101-30D0-5051-000
RGTF1 Pt1000 300mm **KV**	Pt1000	**300 mm**	1101-30D0-5061-000
RGTF1 Pt1000 500mm **KV**	Pt1000	**500 mm**	1101-30D0-5101-000
Housing variant "Q":	**with cable gland** (**IP65**)		
Extra charge:	other measuring ranges optional		on request

THERMASGARD® RGTF 1 - Q	Duct temperature sensors / smoke gas temperature sensors, including mounting flange (with M12 connector)			
Type / WG03	**Sensor / Output**	**Installation length (EL)**	**Q** ●	**Item No.**
RGTF1 Pt100 xx Q	**Pt100** (according to DIN EN 60751, class B)			**IP65**, 4-wire
RGTF1 Pt100 200mm **Q**	Pt100	**200 mm**	●	2Z01-4131-0100-011
RGTF1 Pt100 250mm **Q**	Pt100	**250 mm**	●	2Z01-4131-0100-021
RGTF1 Pt100 300mm **Q**	Pt100	**300 mm**	●	2Z01-4131-0100-031
RGTF1 Pt100 500mm **Q**	Pt100	**500 mm**	●	2Z01-4131-0100-041
RGTF1 Pt1000 xx Q	**Pt1000** (according to DIN EN 60751, class B)			**IP65**, 2-wire
RGTF1 Pt1000 200mm **Q**	Pt1000	**200 mm**	●	2Z05-4131-0100-011
RGTF1 Pt1000 250mm **Q**	Pt1000	**250 mm**	●	2Z05-4131-0100-021
RGTF1 Pt1000 300mm **Q**	Pt1000	**300 mm**	●	2Z05-4131-0100-031
RGTF1 Pt1000 500mm **Q**	Pt1000	**500 mm**	●	2Z05-4131-0100-041
Housing variant "KV":	**with M12 connector** (male, **5-pin**, A-code) (**IP65**)			
Extra charge:	other measuring ranges optional			on request